Figure 1

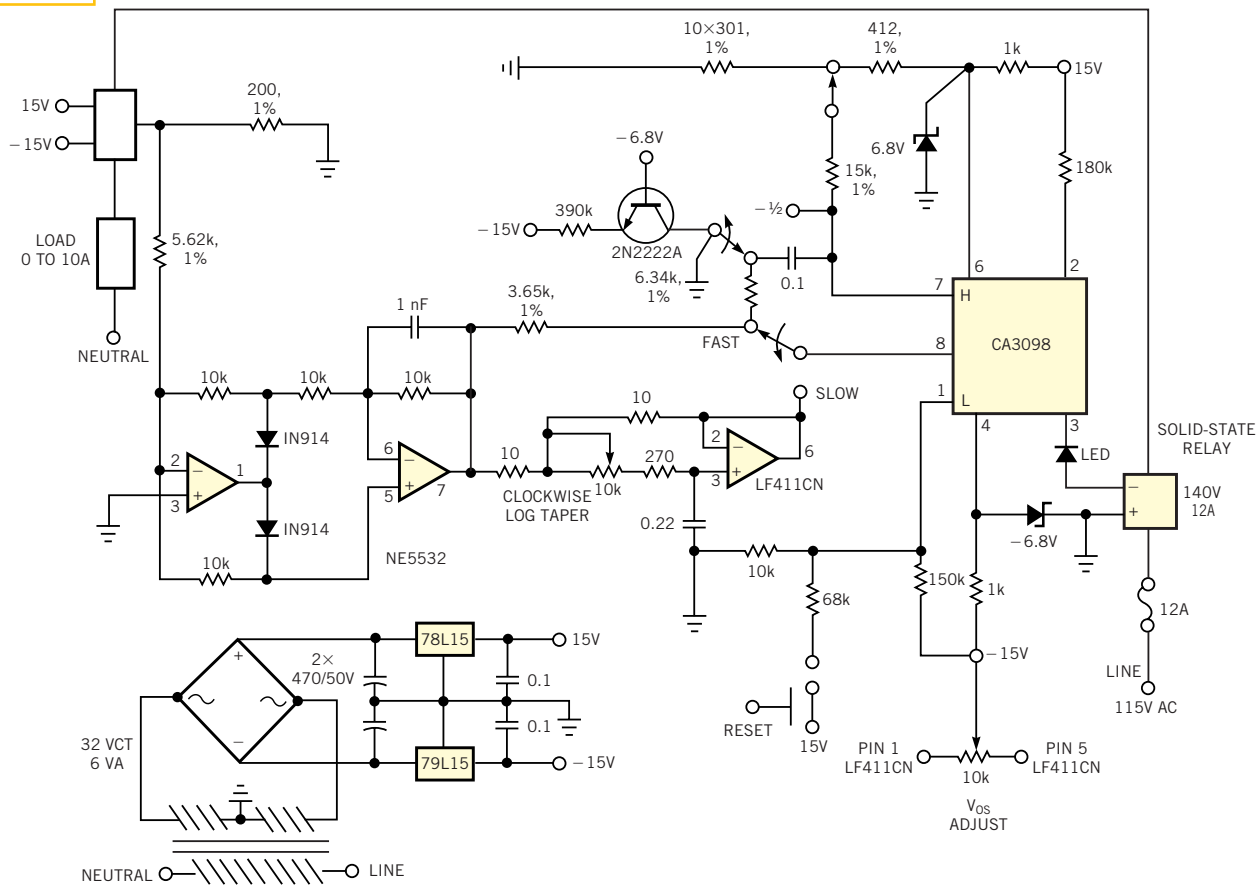

An electronic fuse combines the properties of a current transducer and a solid-state relay.